PROJECT 50: Design and Analysis of Charge Pump by using Cadence Virtuoso

A Comprehensive Study of Analog Circuits

By: Priya Chaudhary, Astitva Johri and
Bhavya Solanki

Chapters:

List of Figures……..…… 3

1. Introduction …….. 4
2. Brief Description…… 5
3. Circuit Design……. 6-7
   3.1 Schematic Design……... 6
   3.2 Simulation Setup...…….. 6
   3.3 Transient Response…..……..……..….. 6
4. Simulation Results…….. 8
5. Advantages and Disadvantages…….. 9
   5.1 Advantages……. 9
   5.2 Disadvantages……. 9
6. Conclusion…….. 10
7. Frequently Asked Questions (FAQs)…….. 11

LIST OF FIGURES

Figure 3.1 Circuit of Charge Pump ……7
Figure 4.1 Simulation Results of Charge Pump ……..8

1. INTRODUCTION

Charge pumps are a type of DC-DC converter that can generate voltages higher or lower than the input supply voltage without the need for inductors. They operate based on charge transfer through capacitors and controlled switches, making them a crucial component in various electronic applications. Due to their compact and efficient design, charge pumps are extensively used in Phase-Locked Loops (PLLs), Non-Volatile Memories (NVMs), power management circuits, and embedded systems.

Charge pumps function by storing charge on capacitors and then transferring it to the output in a controlled manner. This process enables voltage multiplication, inversion, or regulation. Compared to inductor-based converters, charge pumps offer advantages such as reduced electromagnetic interference (EMI), lower cost, and easier integration into ICs. However, they also have limitations, including output current constraints and voltage ripple.

In this documentation, we delve into the design and analysis of a charge pump using Cadence Virtuoso, a powerful Electronic Design Automation (EDA) tool used for circuit simulation and analysis. The implementation, advantages, disadvantages, and performance characteristics of the charge pump will be explored to provide a comprehensive understanding of its operation.

2. BRIEF DESCRIPTION

A charge pump circuit consists of MOSFET switches, capacitors, and a clocking mechanism that enables charge transfer between different circuit nodes. The fundamental principle behind charge pumps is the controlled movement of charge packets, driven by clock pulses, to increase or decrease the voltage at the output.

The operation of a charge pump can be categorized into different phases:

- **Charge Transfer Phase**: Capacitors are charged using the input voltage.
- **Switching Phase**: MOSFET switches are toggled to redistribute charge across different circuit nodes.
- **Output Regulation Phase**: The charge is transferred to the output stage to generate the required voltage.

Cadence Virtuoso enables the simulation and verification of charge pump designs by providing tools for schematic capture, circuit simulation, and layout design. Through this platform, engineers can analyze key performance parameters such as voltage gain, efficiency, output ripple, and transient response. By fine-tuning design parameters, charge pump efficiency can be optimized for specific applications.

3. CIRCUIT DESIGN

3.1 Schematic Design

Using Cadence Virtuoso, the schematic design involves:

1. **Placing Components**: MOSFETs, capacitors, clocking circuit, and output stage.
2. **Interconnections**: Connecting switches and capacitors to create the charge transfer mechanism.
3. **Defining Power and Ground**: Ensuring the correct voltage levels for operation.
4. **Clock Signal Generation**: Providing an alternating clock waveform to drive the circuit.

3.2 Simulation Setup

To analyze the charge pump's performance, the simulation is configured in Cadence Virtuoso:

- **Setting Input Voltage**: Define the input voltage level.
- **Defining Clock Signals**: Apply a periodic waveform to drive the charge transfer process.
- **Transient Analysis**: Observe the charge transfer process over time.
- **Voltage Probes**: Measure the output voltage and ripple.
- **Load Testing**: Verify performance under varying loads.

3.3 Transient Response

The transient response of a charge pump is analyzed by simulating:

- **Startup Behavior**: How the voltage builds up over time.
- **Voltage Ripple**: Fluctuations in output voltage.
- **Efficiency Measurement**: Comparing input and output power.
- **Steady-State Operation**: Ensuring the circuit maintains a stable output.

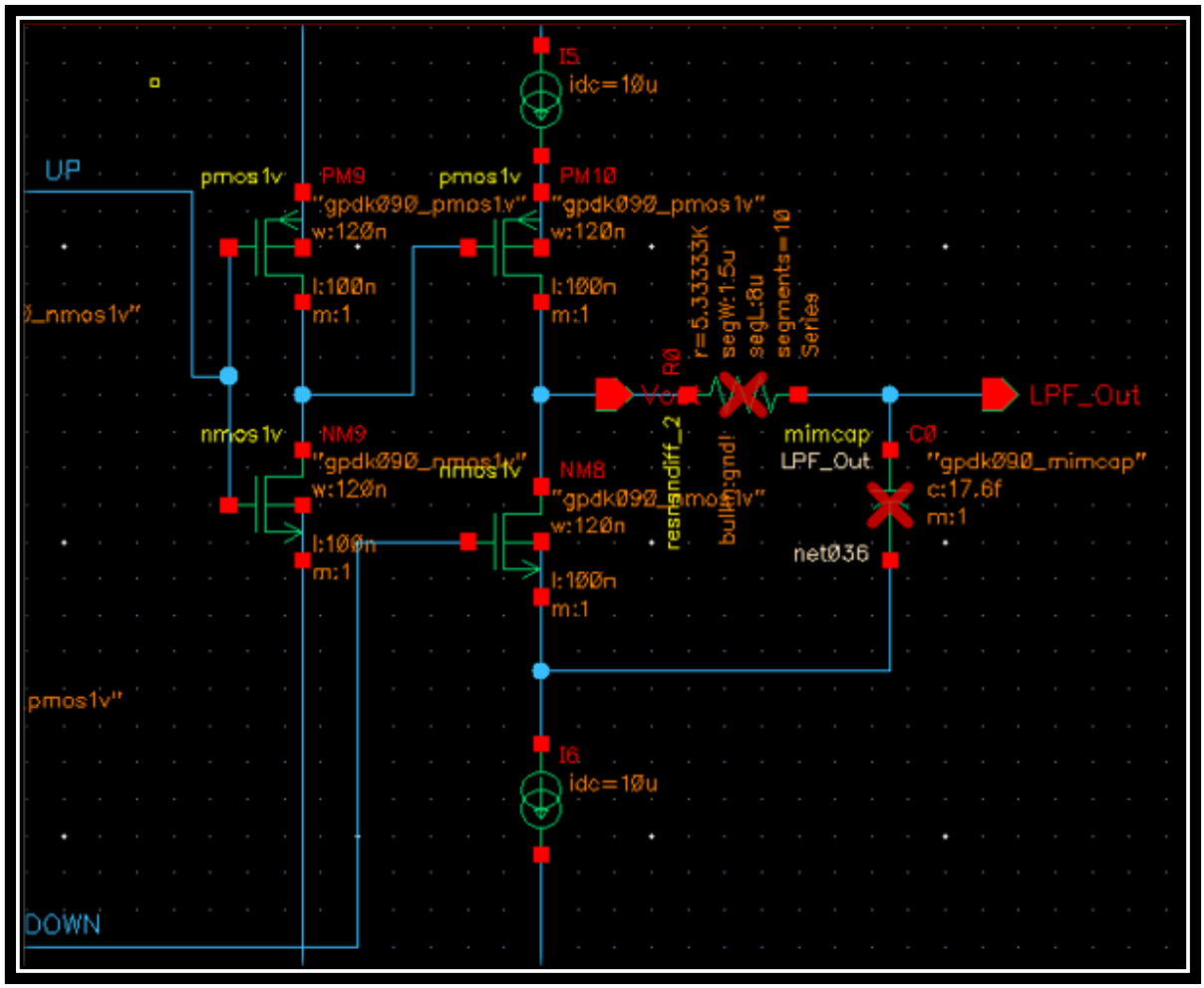

Figure 3.1 Circuit of Charge Pump

4. SIMULATION RESULTS

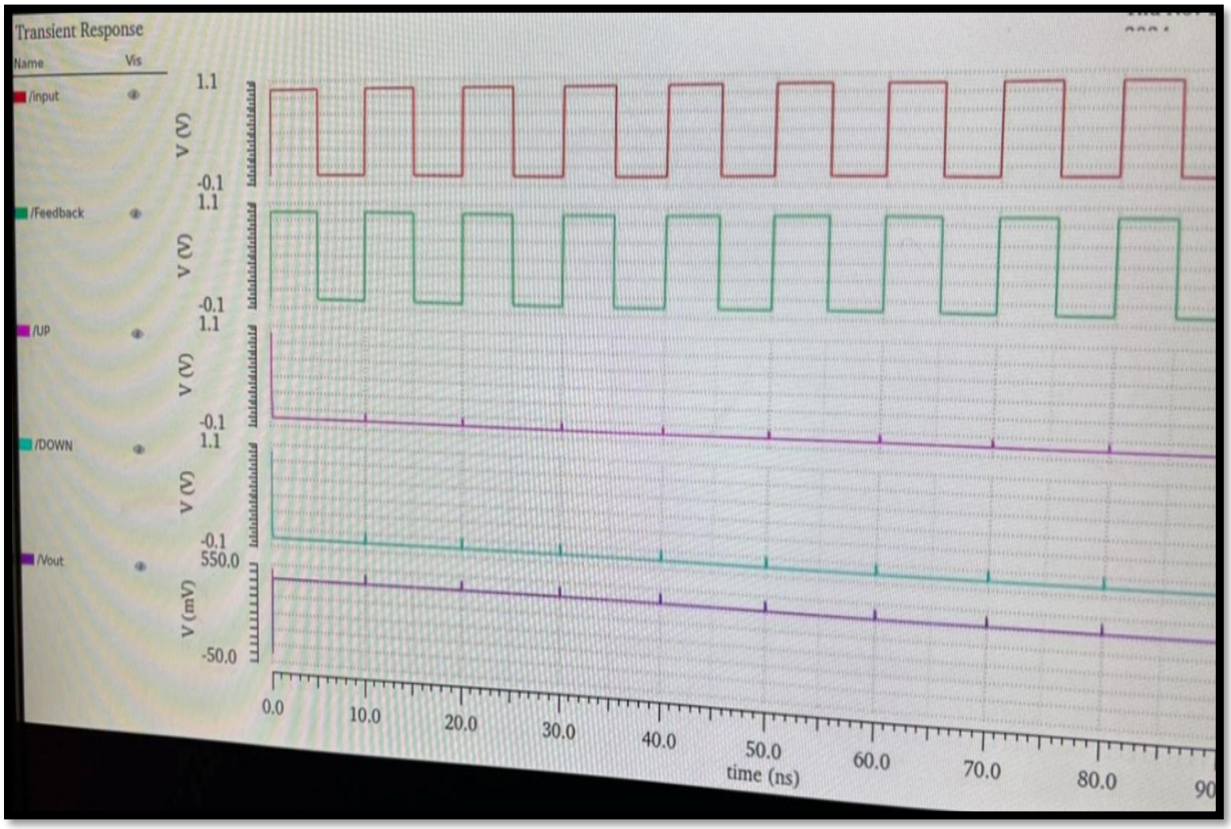

Figure 4.1: Simulation Results of Charge Pump

5. ADVANTAGES AND DISADVANTAGES

5.1 Advantages:-

1. **Compact Design:** Does not require inductors, reducing circuit size.
2. **High Efficiency:** Works efficiently for low-current applications.
3. **Simple Implementation:** Easier to design and integrate into circuits.
4. **Cost-Effective:** Less expensive compared to inductive DC-DC converters.
5. **On-Chip Integration:** Suitable for integration in ICs.

5.2 Disadvantages:-

1. **Limited Output Current:** Cannot provide high output currents efficiently.
2. **Reduced Efficiency with Load:** Performance degrades with increasing load.
3. **Voltage Ripple:** May require additional filtering for stable output.
4. **Switching Noise:** Generates noise due to frequent switching.
5. **Control Complexity:** Needs precise timing and control for optimal performance.

6. CONCLUSION

The design and analysis of a charge pump using Cadence Virtuoso provide a comprehensive understanding of its performance characteristics. Charge pumps offer a compact, efficient, and cost-effective solution for voltage conversion in low-power applications. Their integration into ICs makes them valuable for modern electronic devices, such as memory circuits and communication systems.

However, charge pumps have inherent limitations, such as restricted output current capability and increased voltage ripple at higher loads. To mitigate these challenges, careful design considerations, including switch selection, capacitor sizing, and proper clock signal generation, are essential. By utilizing Cadence Virtuoso, engineers can simulate various configurations to optimize efficiency and performance before fabrication.

In conclusion, charge pumps remain a crucial component in power electronics, particularly in applications where inductors are impractical or undesirable. With proper design techniques and analysis, they provide a viable solution for efficient voltage conversion and regulation.

7. FREQUENTLY ASKED QUESTIONS (FAQs)

Q1. What is the primary application of a charge pump?

Answer: Charge pumps are commonly used in Phase-Locked Loops (PLLs), EEPROMs, DRAMs, and power management ICs to generate higher or negative voltages efficiently.

Q2. How does a charge pump work?

Answer: A charge pump transfers charge between capacitors using switching MOSFETs driven by a clock signal, effectively increasing or decreasing the voltage level.

Q3. Why is Cadence Virtuoso used for charge pump design?

Answer: Cadence Virtuoso provides a robust simulation environment, allowing designers to analyze circuit performance, optimize parameters, and verify design specifications accurately.

Q4. What are the critical design considerations in a charge pump?

Answer: Key considerations include switch sizing, capacitor values, clock frequency, voltage ripple, and load regulation to ensure efficiency and stable output.

Q5. How can the efficiency of a charge pump be improved?

Answer: Efficiency can be enhanced by minimizing parasitic losses, optimizing the clock frequency, using low-resistance switches, and employing proper output filtering techniques.